Type RS3L Drum Rack Storage Unit

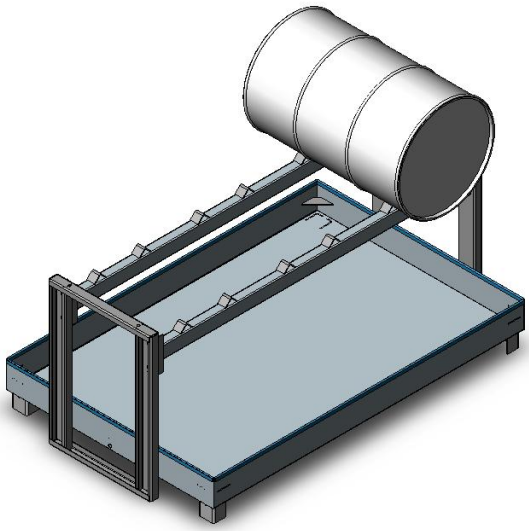

The type RS3L Drum Rack Storage unit has been designed to rack up to three drums 740mm above floor level. The Drum Rack Storage unit comprises of a stand alone drum rack and a spill containment tray to provide a safer working area by protecting against chemical spills. In the advent of a spill, the tray may be removed without disturbing the rack, and emptied by removing the drain plug provided.

The Unit Weight of the type RS3L Drum Rack Storage unit (including tray – type SP6 Spill Bin) is 110kg. All Drum Racking systems come in a long life Zinc plated finish.

Roller Support Angles may be fitted as an option. For all other specifications refer to the diagram below.

East West Engineering also has a range of Forklift Attachments to safely grab, rotate and/or turn drums for placement in all our Storage Systems.

Tray Spill Capacity:
The spill capacity of the tray is at least 110% of the largest package in accordance with Australian Standards, being classified as a portable unit.

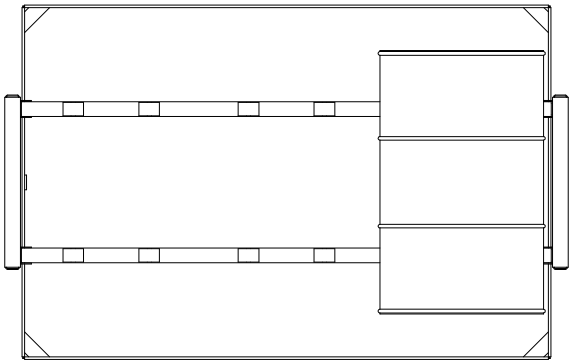

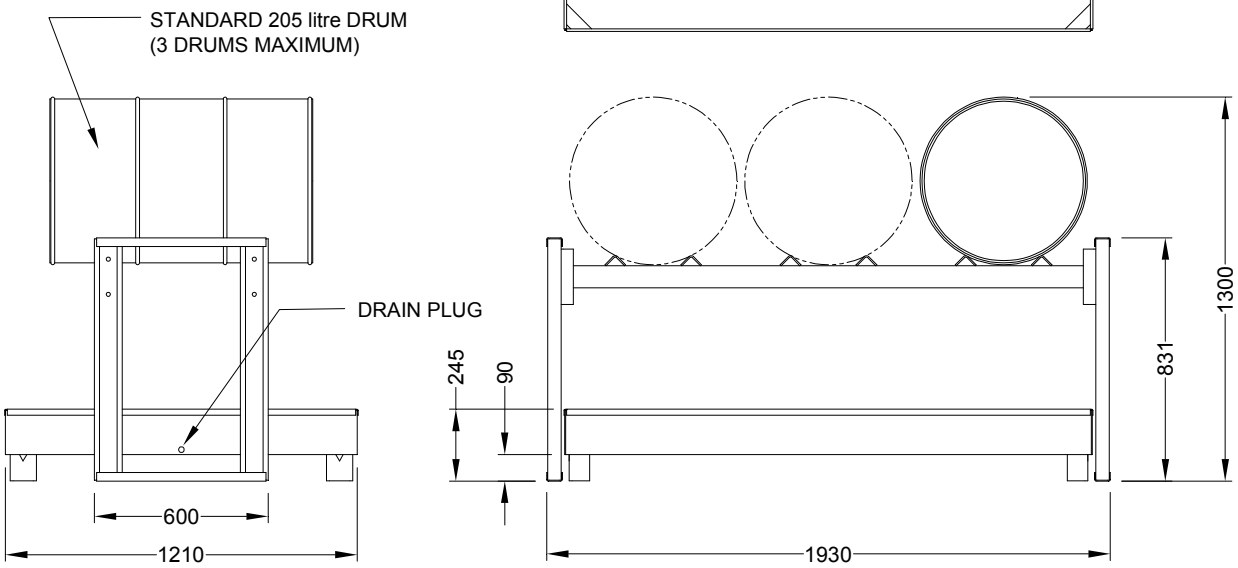

EAST WEST ENGINEERING
A DIVISION OF ALLMESH ENGINEERING PTY LTD

Drawing: **RS3L-Sales**

Issue: **B** — 2nd August 2011
Sheet: 1 of 1

SPECIFICATIONS SUBJECT TO CHANGE WITHOUT NOTICE

East West Engineering Phone +61 2 9938 6944 Fax +61 2 9939 1753